SERVICE MANUAL

AM/FM STEREO TUNER

SANSUI T-77

Sansui

SANSUI ELECTRIC CO., LTD.

96

SPECIFICATIONS

FM Section	
Tuning range	87.5 to 108 MHz
Usable sensitivity	
Mono IHF	10.8 dBf (1.9 μV, T100)
DIN	0.95 μV
50 dB quieting sensitivity	
Mono	15.5 dBf
Stereo	37.0 dBf
Signal to noise ratio at 65 dBf	
Mono	72 dB
Stereo	70 dB
Distortion at 65 dBf	
Mono	less than 0.2 % at 1,000 Hz
Stereo	less than 0.25 % at 1,000 Hz
Alternate channel selectivity (at 400 kHz)	60 dB
Stereo separation	40 dB at 1,000 Hz
Frequency response	30 to 15,000 Hz +1.0 dB, −2.0 dB
Antenna input impedance	300 ohms balanced 75 ohms unbalanced
AM Section	
Tuning range	525 to 1,605 kHz
Usable sensitivity (Bar antenna)	50 dB/m (300 μV/m)
Signal to noise ratio	45 dB
Image response ratio	50 dB at 1,000 Hz
Others	
Output voltage and impedance	500 mV/3.3 kilohms
Power requirements	110 ~ 120, 220 ~ 240 V 50/60 Hz
For U.S.A. and Canada	120 V (60 Hz)
Power consumption	10 W
Dimensions	430 mm (16-15/16") W 74 mm (2-15/16") H 237 mm (9-3/8") D
Weight	2.9 kg (6.4 lbs) net 3.8 kg (8.4 lbs) packed

* **Design and specifications subject to change without notice for improvements.**

96

◇BLOCK DIAGRAM

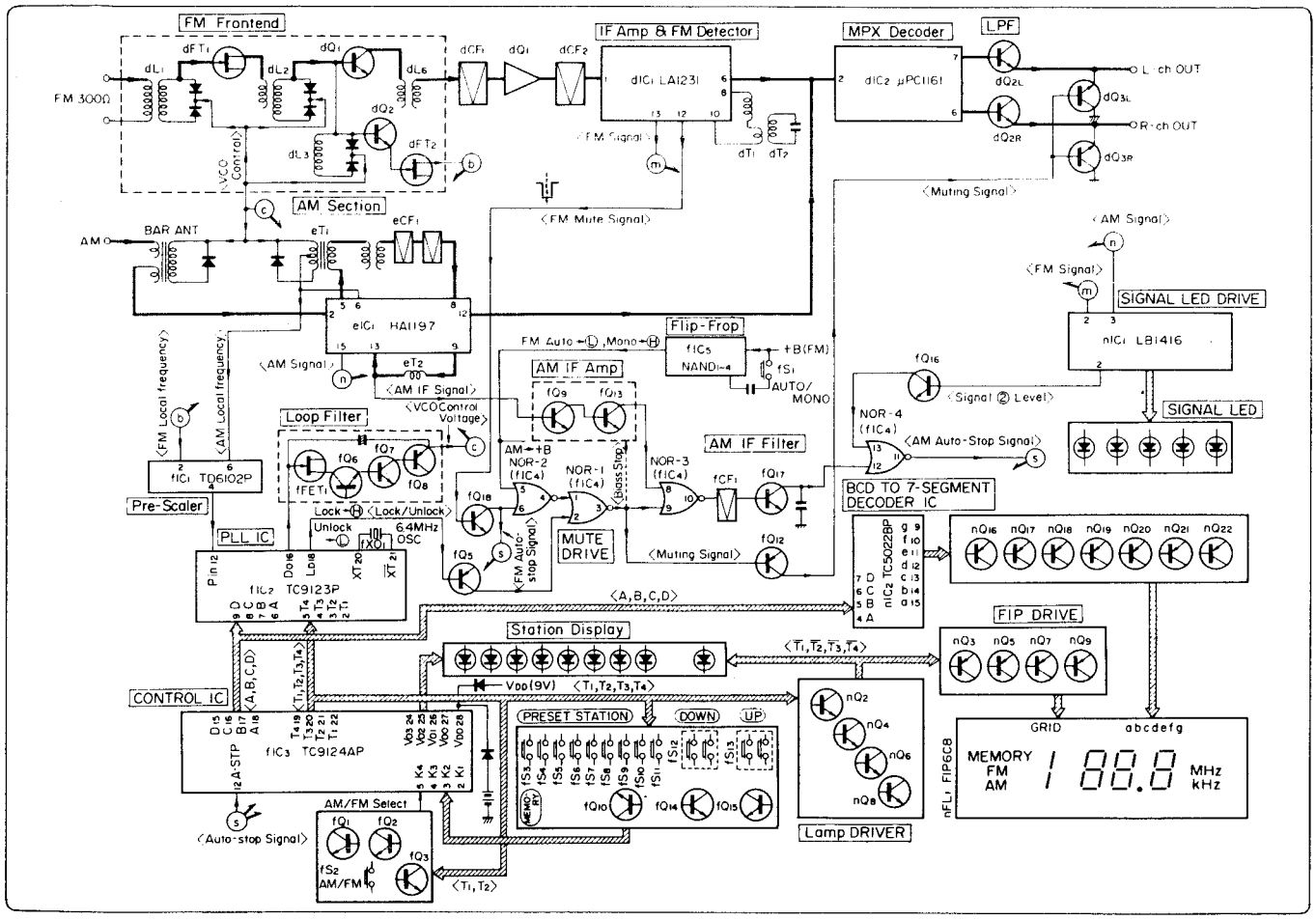

1. OPERATION

1-1. General

The main functions of the Quartz Synthesizer Tuner T-77 will be described below:

1) Manual tuning of one step/one push

If UP or DOWN key switch is pushed once lightly, the receive frequency (every frequency displayed on the indicator tubes) changes by one step (100 kHz in FM; 1 kHz in AM).

2) Fast forwarding tuning

While UP or DOWN key switch is kept pushed slightly, the receive frequency continues to change.

3) Automatic search tuning

If UP or DOWN key switch is pushed once deeply, the receive frequency continues to change and stops when it reaches a frequency of the next broadcasting station.

4) Memory write and memory read

By pushing MEMORY and STATION key switches, it is possible to store the receive frequencies of six FM/AM stations. And also, by pushing one of STATION key switches once, it is possible to select any desired station automatically.

5) Digital display of receive frequency

The receive frequency is displayed digitally by using fluorescent indicator tubes.

The Quartz Synthesizer Tuner T-77 comprises a PLL synthesizer circuit (TC 9123P) for mainly stabilizing the local oscillator frequencies, a synthesizer control circuit (TC 9124AP), a digital display circuit (TC 5022BP) for displaying receive frequencies, and a muting control circuit.

1-2. Operation of quartz PLL synthesizer circuit

Fig. 1-1 PLL Synthesizer block diagram

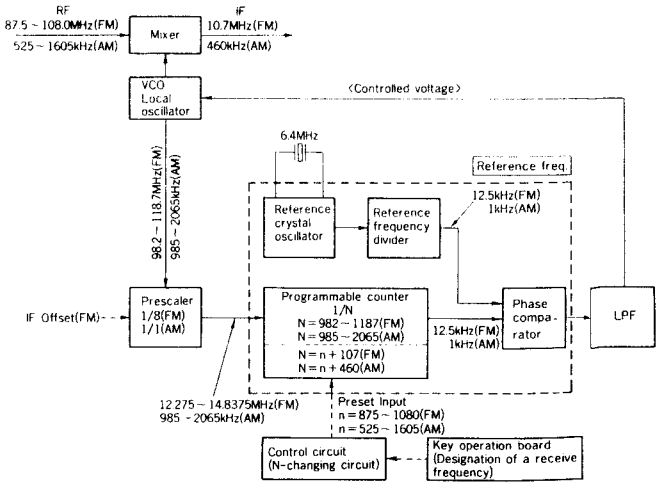

Fig. 1-1 shows a PLL circuit for stabilizing the local oscillator frequencies.

The local oscillator frequency fed from a VCO local oscillator is divided by a Pre-Scaler section, and further divided by a programmable counter section (a counter by which a divide ratio N can be predetermined freely by presetting it from outside) into 1/N.

The output frequency from the programmable counter and the reference frequency from a reference frequency divider are phase-compared by a phase comparator.
If the output signal from the programmable counter lags the reference signal, the output of the phase comparator changes to L level only during a time interval which corresponds to the degree of phase difference, and if the signal leads the reference signal, the output changes to H level. This L or H level signal is applied to a varactor diode in a VCO local oscillator, after having smoothed through a low-pass filter, in order to control voltage across the varactor diode, that is, to change the capacitance of the diode.
Fig. 1-1 illustrates a closed-loop PLL circuit, in which VCO local oscillator frequencies are controlled so that a programmable counter output frequency may be put in phase with a reference frequency divided from a quartz oscillator frequency. Therefore, high-stable local oscillator frequencies can be obtained by using this PLL circuit.
In addition, the control voltage outputted from the phase comparator is also applied to a varactor diode in a RF-stage tuning circuit, so that an accurate tuning can be made for receive frequencies.

A. Electronic tuning

A tuning circuit comprises L and C.
A conventional tuner has used a variable capacitor for changing the tuning frequency; however, the electronic tuning circuit uses a varactor diode of a semiconductor in place of the variable capacitor. Since the electrostatic capacity of the varactor diode changes according to the intensity of DC voltage applied across the varactor diode, the tuning frequency is controlled by changing the applied voltage.

1-3. Operation of synthesizer control circuit

Fig. 1-2 Synthesizer control IC block diagram

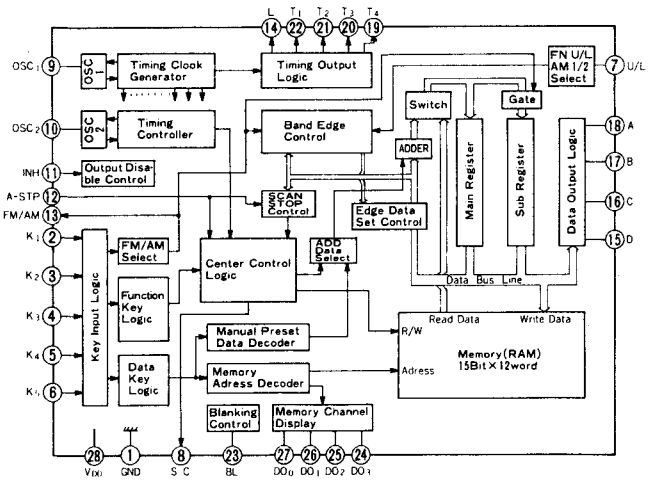

A. General

The main function of the synthesizer control circuit is to generate receive frequency data signals in accordance with the instructions keyed-in from the operation board.
The frequency data signals are sent to the programmable counter of the PLL synthesizer circuit in order to determine the local oscillator frequencies and RF amplifier stage tuning frequencies in accordance with the operation of the PLL synthesizer circuit, as explained under Paragraph 1-2. (See Fig. 1-1)
On the other hand, the frequency data signals are also sent to a receive frequency display circuit, which comprises a seven-segment decoder IC, an indicator tube drive circuit, and frequency indicator tubes, in order to digitally display the receive frequencies.
In this case, C-MOS IC (TC 9124AP) is used for the synthesizer control circuit.
Since the operation of this control IC (TC 9124AP) is too complicated to explain here, as shown in Fig. 1-2, only the functions of input/output terminals of this IC are described in the following paragraphs.

B. Main input/output terminals of control IC and the function

1) Digit signal terminals (T_1 to T_4)

The digit signals generated inside the control IC mean four kinds of timing pulse signals (T_1 to T_4) as listed in Table 1-1.
If the digit signals (T_1 to T_4) are applied to the operation key input terminals (K_1 to K_5), the data are read in inside the IC according to the timings of the digit signals (T_1 to T_4). Also, the data outputs (A to D) of receive frequency and various mode display outputs (DO_0 to DO_3) vary according to the respective timings of the digit signals (T_1 to T_4).

Table 1-1

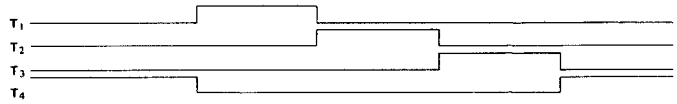

Pin No.	Symbol	Function	T_1	T_2	T_3	T_4
18 17 16 15	A B C D	Data outputs to TC9123P and received frequency indicators	Received frequency data: 1 A digit of units 2 4 8	10 A digit of tens 20 40 80	100 A digit of hundreds 200 400 800	A digit of ten-hundred Receive mode designating output to TC9123P
27	DO_0	Indication outputs for operation modes and memory read out	Director preset	Decimal point in FM	Automatic search tuning	Memory-write
26	DO_1		Memory 1	Memory 2	Memory 3	Memory 4
25	DO_2		Memory 5	Memory 6	Memory 11	Memory 12
24	DO_3		Memory 7	Memory 8	Memory 9	Memory 10
2	K_1	Operation key inputs	Designation of FM_E mode	Command of automatic search	1	2
3	K_2			Command of memory-write	3	4
4	K_3				5	6
5	K_4		Key lock		Down	Up
6	K_5		Designation of AM mode	Designation of FM mode	n + 6	n + 5
7	U/L	Band switching input			Designating of FM_U	Designation of AM_2

The input/output of the control IC is synchronized with the digit signals (T_1 to T_4).

2) Operation key input terminals (K_1 to K_5)

By applying the digit signals (T_1 to T_4) to the operation key input terminals (K_1 to K_5), 20 instructions (inputs) are formed in total, which are different from each other according to the timings of the digit signals (T_1 to T_4). (See Table 1-1)

3) Receive frequency data output terminals (A to D)

The receive frequency data from the receive frequency data output terminals (A to D) and the receive modes are sent to the PLL synthesizer IC (TC 9123P) and the receive frequency display circuit, in BCD notation, while synchronizing with the timings of the digit signals (T_1 to T_4).
The receive frequency data outputs (A to D) and the display outputs (DO_0 to DO_3) are dynamic data which vary according to each timing of the digit signals (T_1 to T_4).
That is to say, the units digit of a receive frequency data is sent basing on the timing of digit signal T_1; the tens digit is sent on T_2; the hundreds digit is sent on T_3; and the thousands digit is sent on T_4.

4) Various-mode display driver output terminals (DO_0 to DO_3)

These terminals output the display output signals for displaying operating conditions of the control IC such as memory reading addresses, automatic scanning, or memory write conditions. Since the display is lit up dynamically synchronizing with the digit signals (T_1 to T_4), it is possible to display 16-kind indications. (See Table 1-1)

1-4. Operations of PLL Synthesizer Tuner

A. FM/AM switching circuit (See Fig. 1-3)

Fig. 1-3 FM/AM swithching circuit

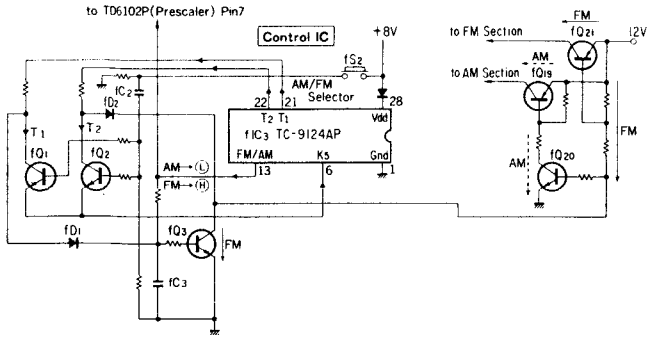

FM/AM switching operation is carried out by applying digit signal T_1 or T_2 to key input K_5. When FM is being received, the FM/AM switching output pin of the control IC, TC 9124AP is at H level, and fQ_3 is in an ON state. Accordingly, the digit signal T_2 is grounded through fD_2 and fQ_3. In this case, if fS_2 (FM/AM selector switch) is closed for an instant, a plus voltage is generated in fC_2 to turn ON fQ_1 and fQ_2. Since T_1 is applied to the collector of fQ_1, and T_2 is not applied to the collector of fQ_2, T_1 is applied to K_5 and thus the mode is switched to AM.

When AM is being received, T_1 is grounded through fD_1 and fC_3. Also, since the FM/AM switching pin of TC 9124AP is at L level, fQ_3 is in an OFF state. Accordingly, if fS_2 is turned ON, T_2 is applied to K_5 and thus the mode is switched to FM.

In this case, the fQ_3 controls the FM/AM power switching circuit from fQ_{19} to fQ_{21}. When AM is being received, since fQ_3 is OFF, fQ_{20} is ON and a voltage of 12 V is developed at the collector of fQ_{19}, thus supplying a power source to LA1240. At this moment, fQ_{21} is in an OFF state. Similarly, when FM is being received, since fQ_3 is ON, fQ_{21} is ON and a power source is supplied to the FM front end and the IF amplifier. At this moment, fQ_{19} and fQ_{20} are both in an OFF state.

B. Tuning circuit (See Fig. 1-4)

The manual and automatic search tuning operations are carried out by using a push switch of double action type.

1) Manual tuning circuit

If the key switch fS_{12} is depressed lightly, fQ_{14} becomes ON, digit signal T_3 is applied to K_4, and the received frequency is shifted down by 100 kHz when FM is being received and by 1 kHz when AM is being received. Similarly, if the key switch fS_{13} is depressed lightly, digit signal T_4 is applied to K_4, and the received frequency is shifted up. In addition, if fS_{12} or fS_{13} is kept depressed lightly, the tuning operation becomes fast forwarding; if the key switch is released, the scanning operation will stop. In this case, the scanning operation will stop upon reaching the upper or lower band edge.

2) Automatic search tuning circuit

If key switch fS_{12} is depressed deeply, fQ_{10} and fQ_{14} become ON, digit signal T_3 is applied to K_4, digit signal T_2 is also applied to K_1, and the received frequency is continuously shifted down. This operation continues even if the key switch fS_{12} is released, and stops when a frequency transmitted from a broadcasting station is received and a tuning detection signal (A-stop signal) is applied to the A-stop pin. Similarly, if key switch fS_{13} is depressed deeply, fQ_{10} and fQ_{15} become ON, and the received frequency is continuously shifted up.

The scanning speed in the automatic tuning can be determined by a time constant of C and R connected with pin OCS-2 of the control IC of TC 9124AP. (fR_{14} and fC_8, in FM; $fR_{12}//fR_{14}$ and fC_8, in AM)

C. Memory function (See Fig. 1-4)

The most advantageous feature of the PLL synthesizer tuner is that any given frequency data can be stored in the memory at all times and any desired broadcasting station can be selected by only depressing a signal key. In the case of this tuner, it is possible to select eight stations in total including both FM and AM.

1) Memory writing

The memory writing is made by depressing keys twice. First, when fS_3 (memory write key) is depressed, digit signal T_2 is applied to K_2 of the control IC of TC 9124AP, and the memory write indicator LED comes on. Next, when a desired memory address is designated by the key, a received frequency data at that time is stored to the memory.

For instance, when a frequency of 95.5 MHz is received and is required to be stored to Memory Address No. 1, first, fS_3 is depressed to turn ON the memory write LED. Next, if the key (fS_4) of Memory Address No. 1 is depressed, digit signal T_3 is applied to K_1 of the control IC, the memory write LED goes off, and the memory read LED of Memory Address No. 1 comes on.

By depressing the memory write key, a state of memory write is obtained; however, after that if the state is left as it is without depressing the memory address key, the state of memory write is released after a certain period of time. The object of this function is that even if the memory write key is depressed by mistake, the previously written data is prevented from being erased. The time interval of memory write is determined by a time constant of C and R connected to pin OSC-2 of the control IC.

2) Memory read

The memory read can be carried out from any operating condition by only depressing any desired memory address key. For instance, if a frequency of 95.5 MHz is stored in Memory Address No. 1 and a frequency of 954 kHz is stored in Memory Address No. 2, a broadcasting station of 95.5 MHz can be received instantaneously by depressing the key of Memory Address No. 1, and a station of 954 kHz can be received instantaneously by depressing the key of Memory Address No. 2.

In addition, since a memory backup function is provided, even if the power switch is once turned OFF and turned ON again, a broadcasting station which had been being received when the power switch was turned OFF is called out again.

Fig. 1-4 Tuning circuit

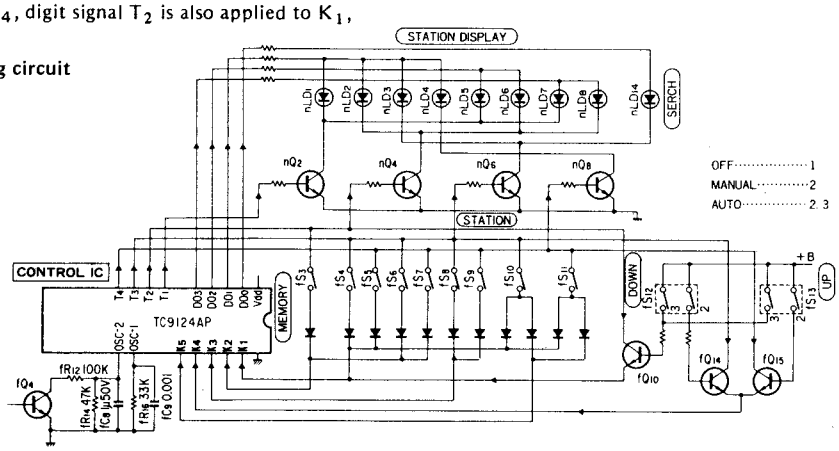

3) Memory backup function

Since the control IC of TC 9124AP has an inhibit pin, if this pin changes to L level, all the functions are stopped and only the contents in the memory are held. At this time, since the power consumption is so small, it is possible to use dry cells for the backup function of the memory. The advantage of use of dry cells for the memory backup function is that if the power plug of the tuner is left removed from a socket outlet for a long time, the memory contents are held.

D. Indicator circuit (See Fig. 1-5)

1) Received frequency indication

The control IC of TC 9124AP sends out data in BCD notation from the output pins of A to D in accordance with timing signals of T_1 to T_4. To indicate the received frequencies, fluorescent indicator tubes are used to dynamically lighting up the indications by utilizing the BCD notation of A to D and digits of T_1 to T_4. The fluorescent indicator tubes can indicate Memory, FM, AM, MHz, and kHz in addition to four digits. (See Fig. 1-5)

As shown in Fig. 1-6 the numerals of 0 to 9 are indicated by using seven segments of a to g.

The BCD notation from pins of A to D are converted into seven-segment indicating data by TC 5022BP, and are next supplied to the plate of each segment (a to g) in the fluorescent tubes through nQ_{16} to nQ_{22}. On the other hand, when a voltage of −15 V is always applied to each grid (1G to 6G) and plate, these grids and plates are in an OFF state. Therefore, the plate are lighted up in order if +9 V is supplied to the grids in accordance with digit signal timings of T_1 to T_4. That is, at timing of T_1, nQ_2 and nQ_3 become an ON state to light up the first digit. Similarly, T_2 turns ON to light up the second digit, T_3 turns ON to light up the third digit; T_4 turns ON to light up the fourth digit, MEMORY, FM, MHz, AM, kHz and dicimal point as well. However, since the BCD notation data at timing T_4 is a mode designating data for TC9123P, at timing T_4, a blanking signal is applied to turn OFF each segment output. Indicators for FM MHz, and decimal point are lit by turning nQ_{13} ON, and indicators for AM and kHz are lit by turning nQ_{14} ON.

2) Memory indication

The memory indicator is indicated by applying the output of DO_0 to nQ_{15} at timing T_4.

Fig. 1-5 Indicator circuit

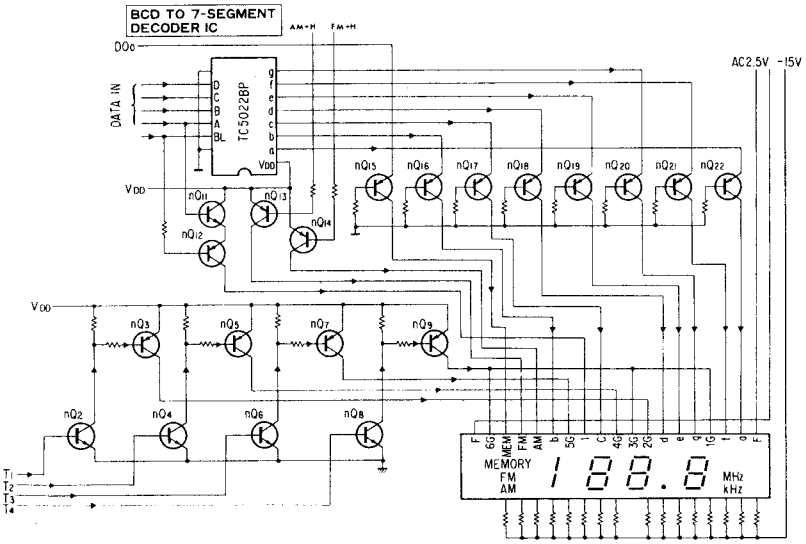

Fig. 1-6 Fluorescent indicator tubes

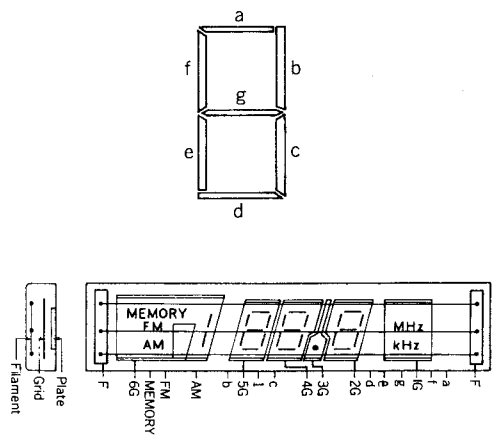

E. Muting control circuit

1) When FM is received (See Fig. 1-7)

In the case where FM is received in the automatic search tuning, the automatic search operation begins by depressing the Up/Down key switch deeply. At this time, a minus pulse is generated at pin LD-out of the PLL synthesizer IC of TC 9123P. The fQ_5 is switched by this minus pulse. A H-level pulse generated at the collector of fQ_5 is applied to Pin 2 of NOR-1 (MSM 4001). If a H level signal is applied to Pin 2, Pin 3 changes to L level to turn fQ_{12} ON. Since the collector of fQ_{12} is connected to the muting transistor dQ_3, this dQ_3 is turned ON to begin muting operation.

If a frequency of broadcasting station is received, since the pin MUTE OUT of the FM/IF amplifier/Detector IC of LA1231 changes from H level to L level, the collector voltage of fQ_{18} changes from L level to H level. A H-level signal generated at the collector of fQ_{18} is applied to the pin Auto/Stop of the control IC of TC 9124AP to stop the automatic search operation. By this, the pulse generated at the pin LD OUT of TC 9123P is stopped and fQ_5 is turned OFF. Accordingly, pin 2 of NOR-1 becomes L level. On the other hand, Pin 1 of NOR-1 becomes L level because fQ_{11} is ON and Pin 6 of NOR-2 is at H level. Accordingly, Pin 3 of NOR-1 becomes H level to turn fQ_{12} OFF, thus muting operation is released.

* In the case of the manual tuning, by depressing UP/DOWN key switch lightly, a minus pulse is instantaneously generated at the Pin LD-out to turn fQ_5 ON. Accordingly, Pin 2 of NOR-1 becomes H level and Pin 3 becomes L level, and thus the muting operation begins. At this time, if a frequency of broadcasting station is received, the Pin MUTE out of LA1231 changes from H level to L level to turn fQ_{18} OFF; accordingly, Pin 4 of NOR-2 changes to L level. Pin 1 of NOR-1 changes to L level when a frequency of a station is received, and Pin 2 is at L level because no switch is depressed; as a result, Pin 3 changes to H level, and thus the muting operation is released. In the case of detuning in FM MONO, Pin 5 of NOR-2 is fixed at H level and Pin 1 of NOR-1 is fixed at L level.

On the other hand, Pin 2 of NOR-1 is normally at L level. As a result, Pin 3 changes to H level, and thus the muting operation is released.

Therefore, it follows that in the case of FM MONO, the muting operates for a moment when the UP/DOWN key switch is depressed.

Fig. 1-7 FM Muting control circuit

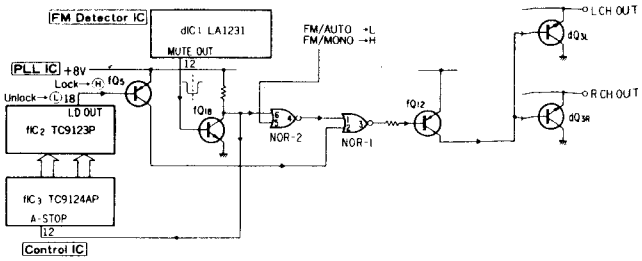

2) When AM is received (See Fig. 1-8)

In the case where AM is received in the automatic search tuning, the muting operates in the same way as in the case where FM is received.

If the search operation begins, the AM/IF amplifier (fQ_9 and fQ_{13}) comes into operation. The output of the AM/IF amplifier is connected to Pin 8 of NOR-3 and is usually kept at H level. Also, since Pin 5 of NOR-2 is at H level in AM, Pin 1 of NOR-1 is fixed at L level. Since Pin 2 of NOR-1 is at H level during scanning operation, Pin 9 of NOR-3 is at L level.

If a frequency of a broadcasting station is received, the AM wave is amplified by fQ_9 and fQ_{13} and is then applied to Pin 8 of NOR-3. As a result, when it reaches a threshold level of Pin 8 of NOR-3, Pin 10 changes as shown in Fig. 1-9 and this output turns fQ_{17} ON through a narrow-band ceramic filter.

This narrow-band ceramic filter is used to prevent error operation due to noise in the automatic search. As a result, Pin 12 of NOR-4 changes to L level. At this time, if the signal indicator level exceeds two, fQ_{16} is turned ON to change Pin 13 of NOR-4 to L level and Pin 11 to H level. The signal of Pin 11 is an AUTO/STOP control signal for the control IC of TC 9124AP; therefore, the automatic search operation stops. As a result, the pulse generated at Pin LD-out of the PLL synthesizer IC TC 9123P is stopped to change Pin 2 of NOR-1 to L level and Pin 3 to H level, and thus the muting operation is released. In the case of manual tuning, the muting operates for a moment when the UP/DOWN key switch is depressed, in the same way as in the case of the manual tuning in FM MONO.

Fig. 1-8 AM Muting control circuit

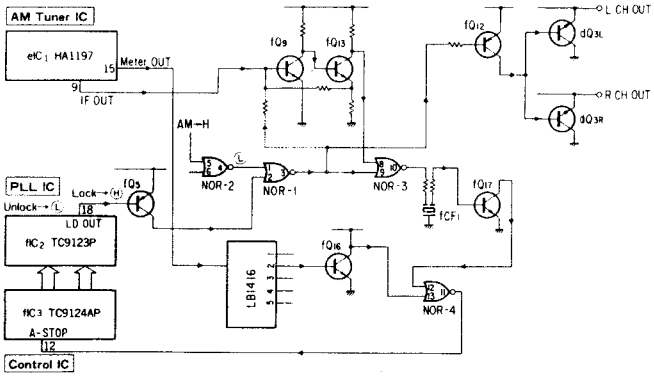

Fig. 1-9

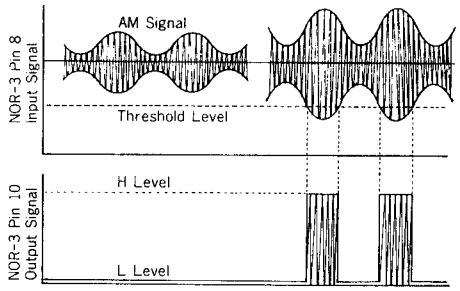

2. INTERIOR BLOCK DIAGRAM OF IC

1. μPC 1161 (MPX Decorder IC)

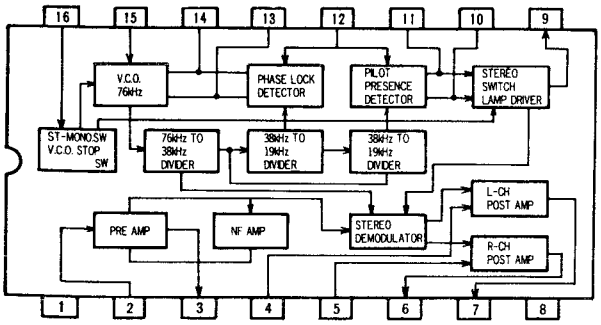

2. LA-1231 (IF amp & FM detector IC)

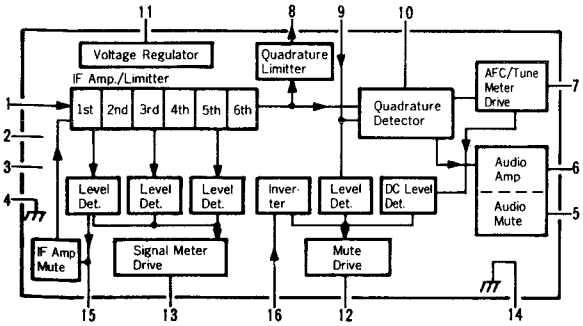

3. MSM4001RS (NOR1 ~ 4)

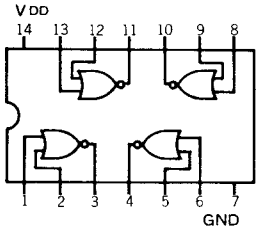

4. HA1197 (AM tuner IC)

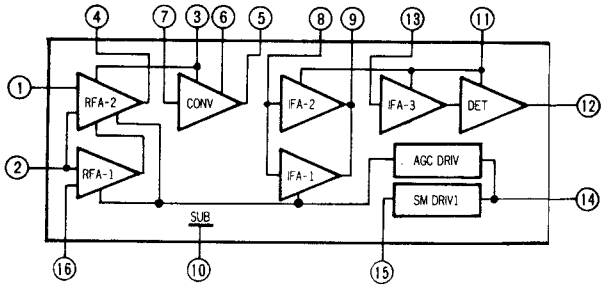

5. LB-1416 (Signal LED drive IC)

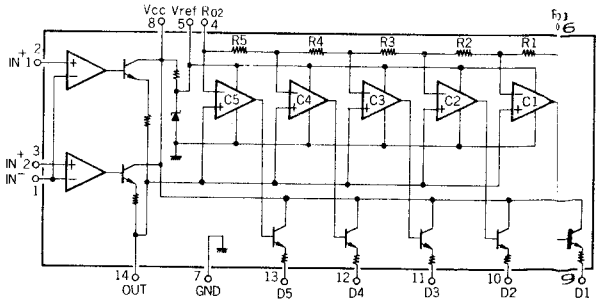

6. MSM4011RS (NAND 1 ~ 4)

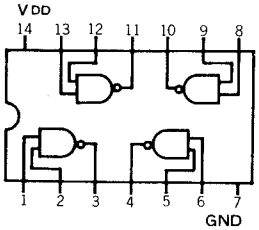

7. TC9123P (PLL synthesizer IC)

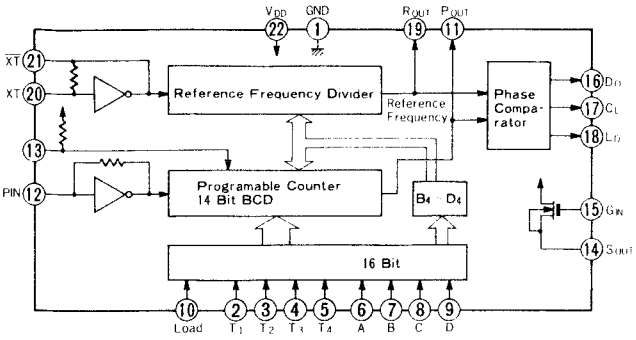

Table 2-1 Function and Operation of Each Pin

Pin NO.	Symbol	Pin name	Description of function and operation
1	Gnd	Gnd pin	
2 3 4 5	T_1 T_2 T_3 T_4	Digit timing signal input pins	Pins for designating the digits of a program inputted to pins of A to D T_1 is the lowest digit; T_4 is the highest digit.
6 7 8 9	A B C D	Program data input pins	Input pins for presetting a divide ratio of programmable counter and a receive mode.
10	L	Load input pin	Command pin for reading a data from pins of A to D. If this pin is at H level, the data is read; if at L level, the preceding data is held regardless of other inputs.
11	P-out	Programmable counter output pin	Output pin for outputting a frequency divided by programmable counter. Used for IF adjustment or for 150 kHz shift in FM-E mode.
12	P-in	Programmable counter input pin	Input pin for programmable counter.
13	-1	Divide ratio shifting command pin	If this pin is connected to Gnd, divide ratio of programmable counter is shifted by −1 from the program value. (operative only in FM mode)
14 15	S-out G-in	FET pins for low-pass filter	Gate input and gate output pins of source follower N-ch MOS FET used for a low-pass filter amplifier
16	D_0	Phase comparator output pins	Output pin for phase comparator
17	C_L		Pin for connecting C and R from outside to presetting a time constant for detecting lockout
18	L_D		Lockout output pin; changes to L level at lockout
19	R-out	Reference frequency output pin	Output pin for reference frequency; 12.5 kHz in FM and 1 kHz in AM
20 21	XT $\overline{XT}$	Quartz oscillator connecting pins	Pins for connecting a quartz oscillator of 6.4 MHz.
22	V_{DD}	V_{DD} input pin	8 ±0.5 V in FMu; 7.0 – 8.5 V in FM_L

8. TD6102P (Prescaler IC)

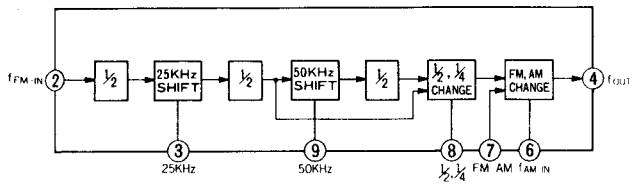

9. TC9124P (Synthesizer control IC)

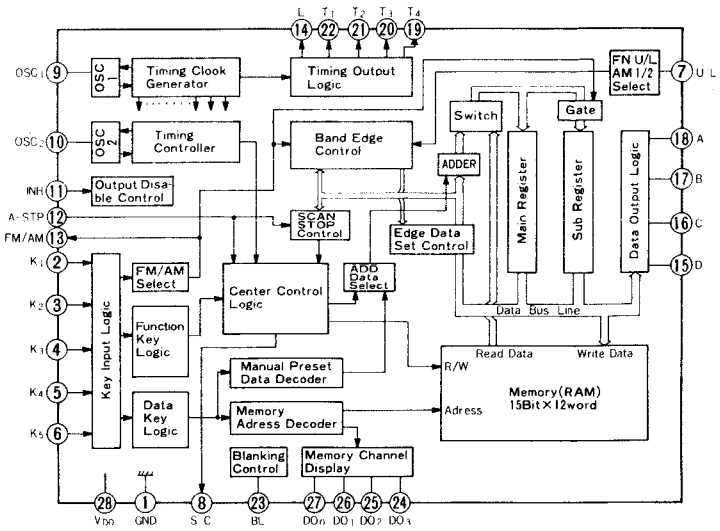

Table 2-2 Function and Operation of Each Pin

Pin NO.	Symbol	Pin name	Description of function and operation
1	Gnd	Gnd terminal	
2 3 4 5 6	K_1 K_2 K_3 K_4 K_5	Key signal input pins	Pins for inputting various key operations. These pins designate different operations in accordance with each timing input of T_1 to T_4. (Twenty commands are possible in total.)
7	U/L	Band switching input pin	Pin for designating U/L in FM mode and 9 kHz step/10 kHz step in AM mode.
8	S/C	Synthesizer/ Clock switching pin	Not used
9	OSC 1	Oscillator pin 1	Pin for generating system controlling clock signals such as T_1 to T_4. C and R are connected from outside.
10	OSC 2	Oscillator pin 2	Pin for generating timing clock signals for determining an automatic scanning speed, memory reading-in time, etc. C and R are connected from outside.
11	INH	Inhibit pin	Inhibit pin used at memory backup. Normally, in an operative state at H level; in an inhibit state at L level.
12	A STOP	Auto/Stop signal input pin:	If H level is applied to this pin during automatic scanning, the scanning is stopped.
13	FM/AM	FM/AM switching output pin:	H level output in FM; L level output in AM. Pin used for FM/AM switching of prescaler and FM/AM mode indication.
14	L	Load signal output pin for PLL LSI:	Output pin for designating data reading timings when connected to L of TC9123P.
15 16 17 18	D C B A	Freq. data output pins:	Output pins for received freq. data. BCD data of 4 digits are output in series synchronizing with timings of T_1 to T_4. Used as a driver for indication and as divide-ratio control of programmable counter of TC9123P.
19 20 21 22	T_4 T_3 T_2 T_1	Digit signal output pins:	Output pins for controlling all the timings such as output data timing of A to D, key input timing of K_1 to K_5, and indication output timing of DO_0 to DO_3.
23	BL	Indication blanking Pin for preventing indication blur. output pin:	

3. ADJUSTMENTS

3-1. FM Adjustment (See Top View on Page 11)

(1) FM IF, RF Adjustment and Dial Calibration

Note: 1. Selector . . . . . FM
2. FM Mode . . . . MONO

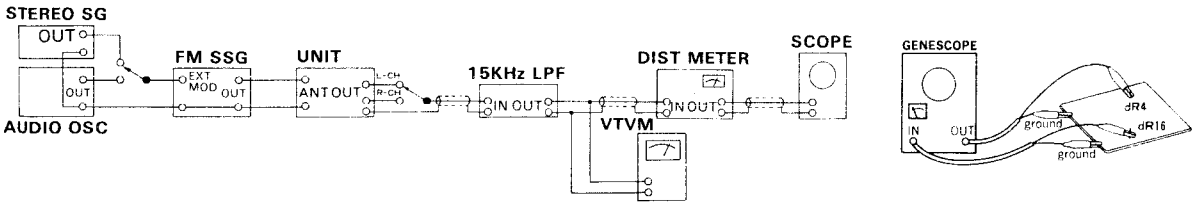

STEP	SUBJECT		FEED SIGNAL FROM	FEED SIGNAL TO	MEASURE OUTPUT	ADJUST	ADJUST FOR	REMARKS
1	Reference Frequency Adj.		98 MHz ANT Input 65 dBf (59.8 dB) No. MOD. FM SSG	ANT terminal 300Ω	Lead wire of dR4 (F-3200) Use Freq. counter	fTC1 (F-3200)	10.750 MHz (White) 10.725 MHz (Orange) 10.700 MHz (Red) 10.675 MHz (Blue) 10.650 MHz (Black)	Adjust for the frequency rank of the ceramic filter used
2	IF Coil Adj.		98 MHz ANT Input 20 dBf (14.8 dB), 1 kHz (100% MOD.), FM SSG	Same as above	Lead wire of dD2 (F-3200) DC Volt Meter	dL6 (Front-end)	Max. Output (about DC 0.5V)	
3	Discriminator Coil Adj. In case of using Genescope	1	No Input	–	Between dTP3 & dTP4 (F-3200) DC Volt Meter	dT1 (F-3200)	DC 0 V ±0.1 V	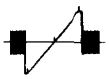
		2	Output 80 dB, Genescope	dR4 (F-3200)	Lead wire of dR16 (F-3200)	dT2, dT1 (F-3200)	Steep linearity of S curve. Make symmetrical S curve.	
	Discriminator Coil Adj. In case of using Dist meter	1	98 MHz ANT Input 65 dBf (59.8 dB), 1 kHz (100% MOD.), FM SSG	ANT terminal 300Ω	Between dTP3 & dTP4 (F-3200) DC Volt Meter	dT1 (F-3200)	DC 0V ±0.1 V	
		2	Same as above	Same as above	OUTPUT L-CH or R-CH, Dist Meter	dT2, dT1 dL6 (F-3200)	Min. THD	
4	88 MHz Dial Calibration	1	No Input	–	Display Indication	Tuning Knob	88 MHz	
		2	No Input	–	Between eTP5 & Earth (F-3200) DC Volt Meter	dL3 (Front-end)	3.0 V ±0.1 V	
5	108 MHz Dial Calibration	1	No Input	–	Display Indication	Tuning Knob	108 MHz	
		2	No Input	–	Between eTP5 & Earth (F-3200) DC Volt Meter	dTC3 (Front-end)	21.0 V ±0.1 V	
6	98 MHz RF Adj.		98 MHz ANT Input Minimum value with sine wave· 1000 Hz (100% MOD.), FM SSG	ANT terminal 300Ω	OUTPUT L-CH or R-CH, VTVM & SCOPE	dTC1, dTC2 (Front-end)	Max. Output	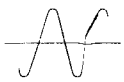

●Abbreviations

<Equipment>

AM FM Generator Oscilloscope	Genescope
AM Standard Signal Generator	AM SSG
FM Standard Signal Generator	FM SSG
FM Stereo Generator	Stereo SG
Oscilloscope	Scope
Audio Oscillator	Audio Osc.
Distortion Meter	Dist. Meter

<Others>

Antenna	ANT.
Modulation	MOD.
Total Harmonic Distortion	T.H.D.

(2) FM STEREO Adjustment

1. FM Mode . . . . . AUTO

STEP	SUBJECT	FEED SIGNAL FROM	FEED SIGNAL TO	MEASURE OUTPUT	ADJUST	ADJUST FOR	REMARKS
1	PLL VCO Adj.	98 MHz ANT Input 65 dBf (59.8 dB), FM SSG, Pilot 19 kHz (9% MOD.), R or L MODE 1 kHz + Pilot (100% MOD.), STEREO SG	ANT terminal 300Ω	Stereo indicator	dVR3 (F-3200)	Light indicator	Adjust the VR within center of lighting level
	PLL VCO Adj. In case of using Freq.	98 MHz ANT Input 65 dBf (59.8 dB), FM SSG, No MOD.	Same as above	dTP6 (F-3200) Freq. counter	dVR3 (F-3200)	19 kHz ± 50 Hz	
2	Separation Adj.	98 MHz ANT Input 65 dBf (59.8 dB), FM SSG, Pilot 19 kHz (9% MOD.), L MODE 1 kHz + Pilot (100% MOD.), STEREO SG.	Same as above	OUTPUT L-CH VTVM & SCOPE	–	Read the indication on VTVM	Confirm R → L-CH
				OUTPUT R-CH VTVM & SCOPE	dVR2 (F-3200)	–40 dB from the indication above.	
3	Muting level Adj.	98 MHz ANT Input 30 dBf (24.8 dB), FM SSG, Pilot 19 kHz (9% MOD.), L or R MODE 1 kHz + Pilot (100% MOD.), STEREO SG.	Same as above	Stereo indicator or OUTPUT L-CH or R-CH VTVM & SCOPE	dVR1 (F-3200)	Stereo indicator turns ON or Output Signal comes out	

◇ **Selection of Intermediate Frequencies (FM)**

* When the central frequency (shown by a color) of the ceramic filter is changed, the following connection must be made by using jumper wires.
* Unity the color marks of the FM ceramic filters (dcF1, dcF2) on the F-3200 with the same color.

Colouring	Intermediate frequency	Connecting Position of Jumper wire on F-3200		
		JW25	JW26	JW27
BLACK	10.650 MHz	–	O	O
BLUE	10.675 MHz	O	O	O
RED	10.700 MHz	–	–	–
ORANGE	10.725 MHz	O	–	–
WHITE	10.750 MHz	–	O	–

3-2. AM Adjustment (See Top View on Page 11)

(1) AM IF Adjustment and Dial Calibration

Note: 1. Selector . . . . . AM

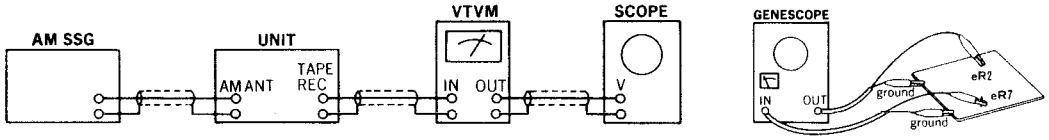

STEP	SUBJECT		FEED SIGNAL FROM	FEED SIGNAL TO	MEASURE OUTPUT	ADJUST	ADJUST FOR	REMARKS
1	IF Coil Adj.		Output 60 dB, Genescope	eR2 (F-3200)	eR7 (F-3200)	eCF1, eT2 (F-3200)	Max. Waveform	460KHz
2	1602 kHz Dial Calibration	1	No Input	–	Display Indication	Tuning Knob	1602 kHz	
		2	No Input	–	Between·eTP5 & Earth (F-3200)·DC Volt Meter	eT1 (F-3200)	22.5 V ±0.1 V	
3	603 kHz RF Adj.		603 kHz ANT Input 30 dB, 400 Hz (30% MOD), AM SSG	ANT terminal	OUTPUT L-CH or R-CH VTVM & SCOPE	Bar Antenna	Max. Output	
4	1404 kHz RF Adj.		1404 kHz ANT Input 30 dB, 400 Hz (30% MOD), AM SSG	Same as above	Same as above	eTC1 (F-3200)	Max. Output	

4. PARTS LOCATION & PARTS LIST

Since some of capacitors and resistors are omitted from parts lists in this Service Manual, refer to the new Common Parts List for capacitors & resistors.

4-1. F-3200 Tuner & Control Circuit Board (Stock No. 07081101)

Component Side

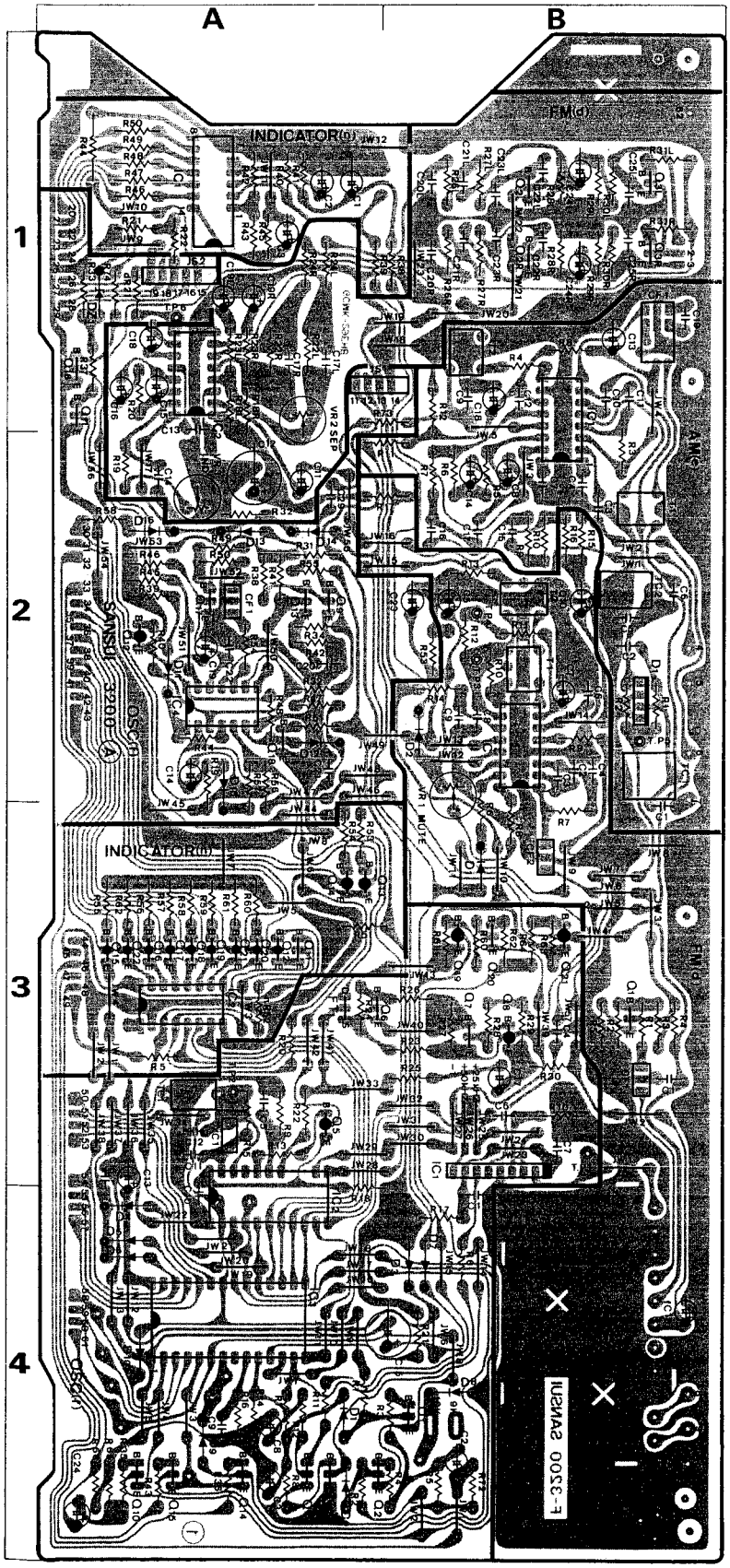

Parts List

Parts No.	Stock No.	Description
•Transistor		
dQ1	03069500	2SC668 C
dQ2	03059501	2SC945 Q
dQ3	03059501	2SC945 Q
•IC		
dIC1	03612300	LA1231N
dIC2	03609900	μPC1161C
•Diode		
dD1	03117600	1S2473D
dD2	03117600	1S2473D
dCF1	07102200	Ceramic Filter 10.7 MHz
dCF2	07102200	Ceramic Filter 10.7 MHz
dT1	42362700	FM IF Coil
dT2	42362800	FM IF Coil
dVR1	10351300	10kΩ (B) Volume, mute cont.
dVR2	10352300	470kΩ (B) Volume, sep.
dVR3	10351100	4.7kΩ (B) Volume, V.C.O.
•IC		
eIC1	03603900	HA1197
	03608000	LA1240
•Diode		
eD1	07197200	KV1226
eTC1	12301000	Trimmer Capacitor
eT1	07198700	AM RF Coil
eCF1	07198500	AM IF Coil (459 kHz) XX, EU, BS, AS
	07198600	AM IF Coil (460 kHz) UL, CS
eT2	42306200	AM IF Coil
•Transistor		
fQ1	03059501	2SC945 Q
fQ2	03059501	2SC945 Q
fQ3	03059501	2SC945 Q
fQ4	03059501	2SC945 Q
fQ5	03006800	2SA733-2 P
fQ6	03059501	2SC945 Q
fQ7	03059501	2SC945 Q
fQ8	03006800	2SA733-2 P
fQ9	03059501	2SC945 Q
fQ10	03059501	2SC945 Q
fQ11	03059501	2SC945 Q
fQ12	03006800	2SA733-2 P
fQ13	03059501	2SC945 Q
fQ14	03059501	2SC945 Q
fQ15	03059501	2SC945 Q
fQ16	03059501	2SC945 Q
fQ17	03059501	2SC945 Q
fQ18	03059501	2SC945 Q
fQ19	07206800	2SA952 M
fQ20	03059501	2SC945 Q
fQ21	07206800	2SA952 M
•FET		
fFT1	03703001, 2	2SK117-Y, GR
	03703400, 1	2SK163-K1, K2
•IC		
fIC1	07197600	TD6102P
fIC2	07197800	TC9123P. GR
fIC3	07197900	TC9124AP
fIC4	03609500	MSM4001RS
	03610500	TC4001BP
fXO1	07197100	Xtal 6.4 MHz
•Diode		
fD1	03117600	1S2473D
fD2	03117600	1S2473D
fD3	03117600	1S2473D
fD4	03117600	1S2473D
fD5	03117600	1S2473D
fD6	03117600	1S2473D
fD7	03117600	1S2473D
fD8	03117600	1S2473D
fD9	07176400	1S2473D
fD10	07176400	1S2473D EU, BS, AS
fD11	03117600	1S2473D
fD12	03117600	1S2473D
fD13	03117600	1S2473D
fD14	03117600	1S2473D
fD15	03117600	1S2473D
fD16	03117600	1S2473D
•Zener Diode		
fDZ1	03159800	EQA01-14R
fTC1	12301000	Trimmer Capacitor
fCF1	07221800	Ceramic Filter 459 kHz XX, EU, BS, AS
	07225700	Ceramic Filter 460 kHz UL, CS
•Transistor		
nQ11	03059501	2SC945 Q
nQ12	07194700	2SA1015-Y
nQ13	07194700	2SA1015-Y
nQ14	07194700	2SA1015-Y
nQ15	07194700	2SA1015-Y
nQ16	07194700	2SA1015-Y
nQ17	07194700	2SA1015-Y
nQ18	07194700	2SA1015-Y
nQ19	07194700	2SA1015-Y
nQ20	07194700	2SA1015-Y
nQ21	07194700	2SA1015-Y
nQ22	07194700	2SA1015-Y
•IC		
nIC1	03611600	LB1416
nIC2	07206000	TC5022BP
nR44	00138900	150Ω 1W N.I.R.
	07204500	Frontend

4-2. F-3201 Indicator Circuit Board (Stock No. 07081201)

Component Side

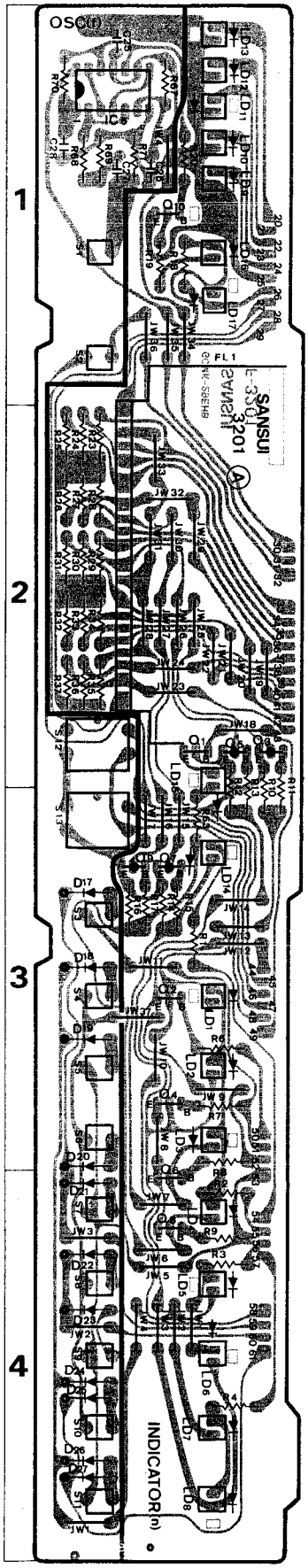

Parts List

Parts No.	Stock No.	Description
•IC		
fIC5	03604000 03604100	MSM4011 TC4011P
•Diode		
fD17	03117600	1S2473D
fD18	03117600	1S2473D
fD19	03117600	1S2473D
fD20	03117600	1S2473D
fD21	03117600	1S2473D
fD22	03117600	1S2473D
fD23	03117600	1S2473D
fD24	03117600	1S2473D
fD25	03117600	1S2473D
fD26	03117600	1S2473D
fD27	03117600	1S2473D
fS1	07218500	Push Switch, mode
fS2	07218500	Push Switch, selector
fS3	07218500	Push Switch, memory
fS4	07218500	Push Switch, station
fS5	07218500	Push Switch, station
fS6	07218500	Push Switch, station
fS7	07218500	Push Switch, station
fS8	07218500	Push Switch, station
fS9	07218500	Push Switch, station
fS10	07218500	Push Switch, station
fS11	07218500	Push Switch, station
fS12	07224100	Push Switch, tuning down
fS13	07224100	Push Switch, tuning up

Parts No.	Stock No.	Description
•Transistor		
nQ1	03059501	2SC945Q EU, BS, AS
nQ2	03059501	2SC945Q
nQ3	07194700	2SA1015-Y
nQ4	03059501	2SC945 Q
nQ5	07194700	2SA1015-Y
nQ6	03059501	2SC945 Q
nQ7	07194700	2SA1015-Y
nQ8	03059501	2SC945 Q
nQ9	07194700	2SA1015-Y
nQ10	03059501	2SC945 Q
nFL1	07198000	FIP6C8 Display Unit
nLD1	03193200	GL-9PR9 LED
nLD2	03193200	GL-9PR9 LED
nLD3	03193200	GL-9PR9 LED
nLD4	03193200	GL-9PR9 LED
nLD5	03193200	GL-9PR9 LED
nLD6	03193200	GL-9PR9 LED
nLD7	03193200	GL-9PR9 LED
nLD8	03193200	GL-9PR9 LED
nLD9	03193300	GL-9NG9 LED
nLD10	03193300	GL-9NG9 LED
nLD11	03193300	GL-9NG9 LED
nLD12	03193300	GL-9NG9 LED
nLD13	03193300	GL-9NG9 LED
nLD14	03193200	GL-9NG9 LED
nLD15	03193200	GL-9PR9 LED EU, BS, AS
nLD16	03193400	GL-9NG9 LED
nLD17	03193200	GL-9NG9 LED

4-3. F-3276 Power Supply Circuit Board (Stock No. 07081301)

Component Side

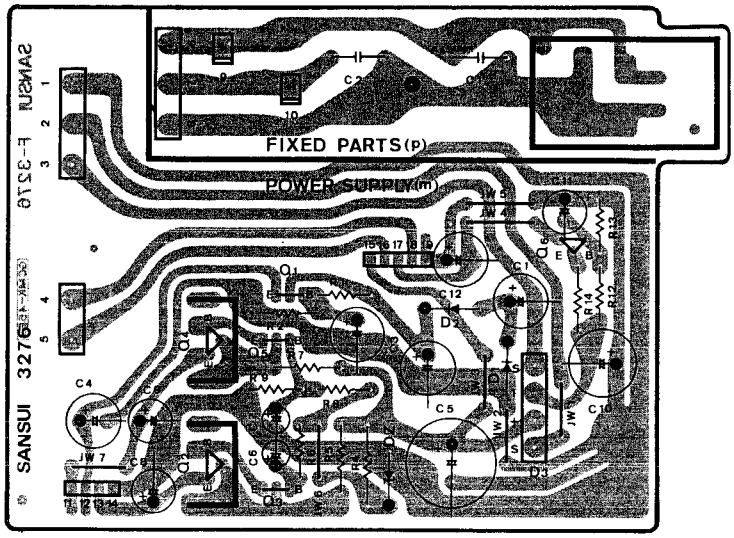

Parts List

Parts No.	Stock No.	Description
•Transistor		
mQ1	03065500	2SC1775 E
mQ2	03083902	2SD313AL E
mQ3	03059501	2SC945 Q
mQ4	03083902	2SD313AL E
mQ5	03059501	2SC945 Q
mQ6	03033101	2SB528 D

Parts No.	Stock No.	Description
•Diode		
mD1	03117700	10E-2
mD2	03117700	10E-2
mD3	03117000	RB-152
•Zener Diode		
mDZ1	03159800	EQA01-14R
mR4	00140000	2.2kΩ 1W N.I.R.

• Abbreviations

C.R.	Carbon Resistor	E.L.	Low Leak Electrolytic Capacitor
S.R.	Solid Resistor	E.B.	Bi-Polar Electrolytic Capacitor
Ce.R.	Cement Resistor	E.BL.	Low Leak Bi-Polar Electrolytic Capacitor
M.R.	Metal Film Resistor	Ta.C.	Tantalum Capacitor
F.R.	Fusing Resistor	F.C.	Film Capacitor
N.I.R.	Non-Inflammable Resistor	M.P.	Metalized Paper Capacitor
C.C.	Ceramic Capacitor	P.C.	Polystyrene Capacitor
C.T.	Ceramic Capacitor, Temperature Compensation	G.C.	Gimmic Capacitor
E.C.	Electrolytic Capacitor		

5. OTHER PARTS

5-1. Front View

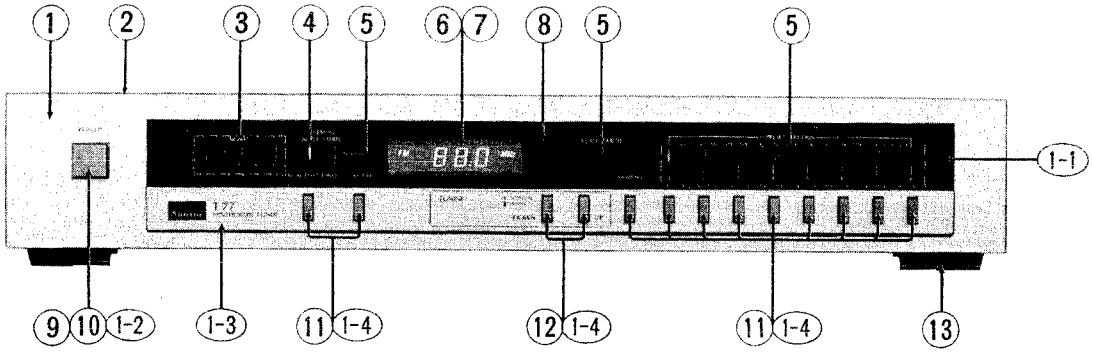

5-2. Top View

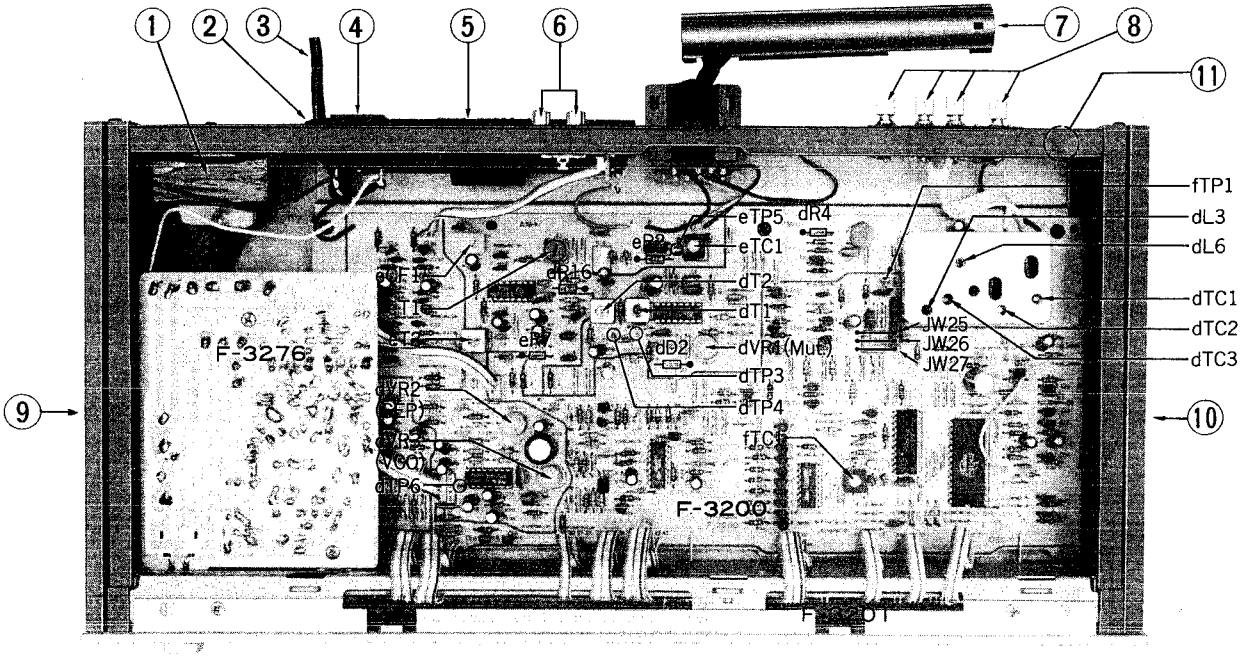

Parts List <Front View>

Parts No.	Stock No.	Description
1	07597500	Front Panel Ass'y
1-1	07597900	Smoked Plate
1-2	59560800	Knob Guide, power
1-3	07597800	Dress Panel
1-4	07599300	Knob Ass'y
2	07591000	Bonnet
3	03193300	LED, signal
4	03193400	LED, auto
5	03193200	LED, stereo, search, memory
6	07198000	Display Unit
7	07565110	Filter
8	07599100	Indicator Plate XX
	07599200	Indicator Plate (50 kHz) EU, BS, AS
9	53195000	Knob, power
10	07194600	Push Switch, power
11	07218500	Key Switch, FM auto/mono, FM/AM, memory
12	07224100	Key Switch, down, up
13	55074500	Leg

Parts List <Top View>

Parts No.	Stock No.	Description
1	15000801	Power Transformer
2	39106000	Strain Relief
3	38004700	Power Cord
4	07189600	AC Outlet XX, UL, CS
	07204700	Voltage Selector EU, BS, AS
5	07559400	Battery Case
6	22007000	2P Output Terminal
7	07204800	Bar Antenna
8	22103100	Antenna Terminal
9	07593500	Side Panel (L)
10	07593600	Side Panel (R)
11	11103000	AM CHANNEL Switch XX

• Note

As to C.S.A., B.S., ES, and xx marked in the Parts Lists, note the followings:

C.S.A. . . . . Parts used in the unit which is applicable to Canada under industrial standards.

B.S. . . . . Parts used in the unit which is applicable to British under industrial standards.

E.U. . . . . Parts used in the unit which is applicable to Sweden, Denmark, Norway, Finland, West Germany, and Switzerland under industrial standards.

XX . . . . . Parts used in the unit which is applicable to other countries excepting mentioned above.

* Design and specifications subject to change without notice for improvement.
* La présentation et les spécifications sont susceptibles d'être modifiées sans préavis par suites d'améliorations éventuelles.
* Änderungen, die dem technischen Fortschritt dienen, bleiben vorbehalten.

6. SCHEMATIC DIAGRAM

6-1. Tuner Section

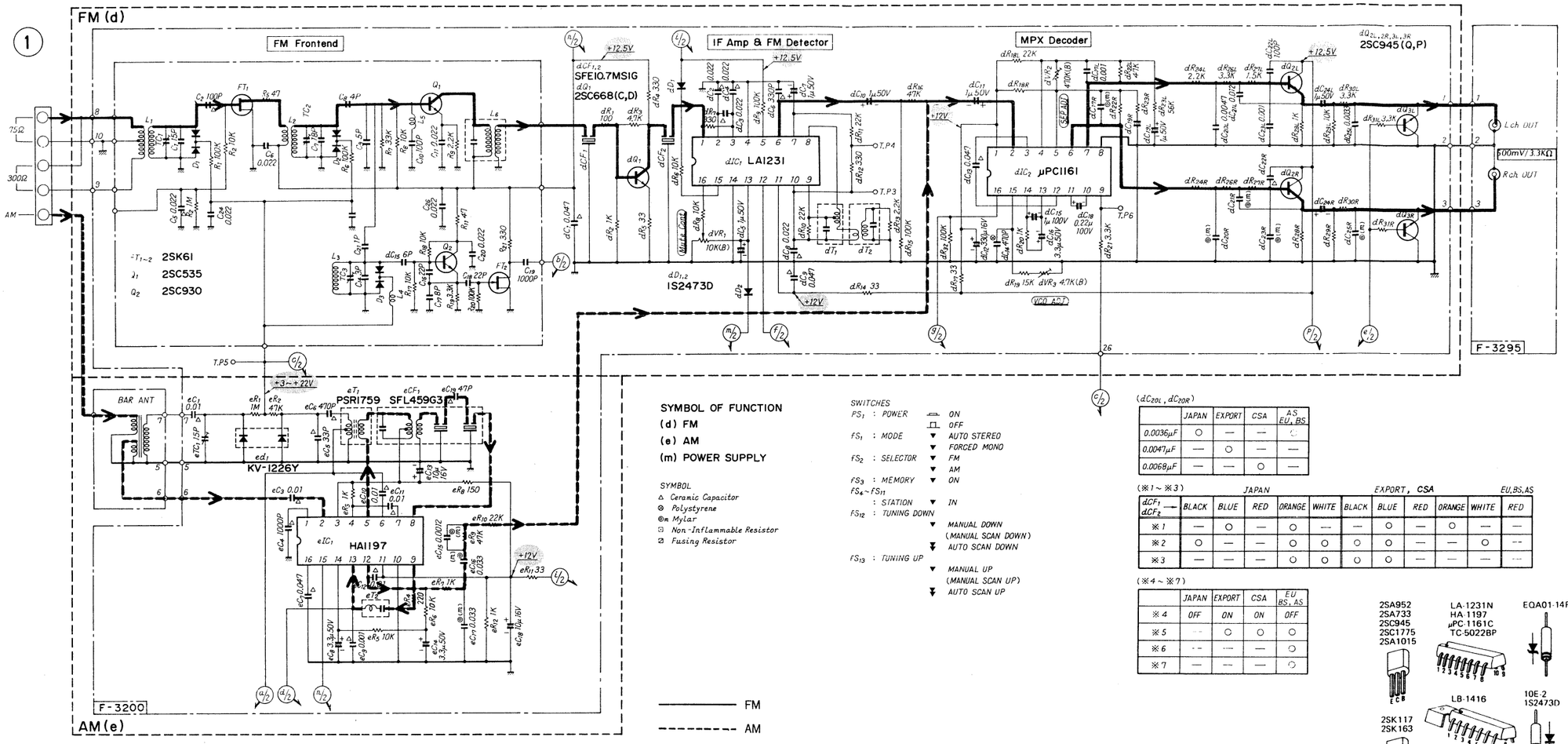

(dC20L, dC20R)

	JAPAN	EXPORT	CSA	AS EU, BS
0.0036μF	○	—	—	○
0.0047μF	—	○	—	—
0.0068μF	—	—	○	—

(※1 ~ ※3)

dCF1 dCF2	JAPAN BLACK	BLUE	RED	ORANGE	WHITE	EXPORT, CSA BLACK	BLUE	RED	ORANGE	WHITE	EU,BS,AS RED
※1	—	○	—	○	—	—	○	—	○	—	—
※2	○	—	—	○	○	○	○	—	—	○	—
※3	—	—	—	○	○	○	○	—	—	—	—

(※4 ~ ※7)

	JAPAN	EXPORT	CSA	EU BS, AS
※4	OFF	ON	ON	OFF
※5	—	○	○	○
※6	—	—	—	○
※7	—	—	—	○

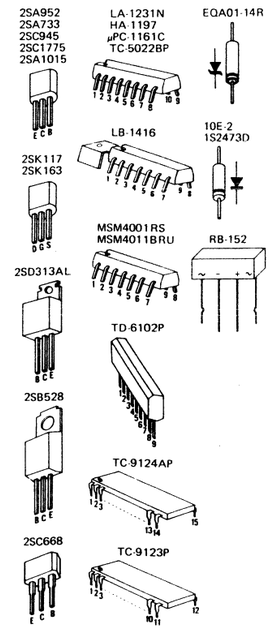

* Design and specifications subject to change without notice for improvement.
* La présentation et les spécifications sont susceptibles d'éter modifiées sans préavis par suites d'améliorations éventuelles.
* Änderungen, die dem technischen Fortschritt dienen, bleiben vorbehalten.

6-2. Control Section

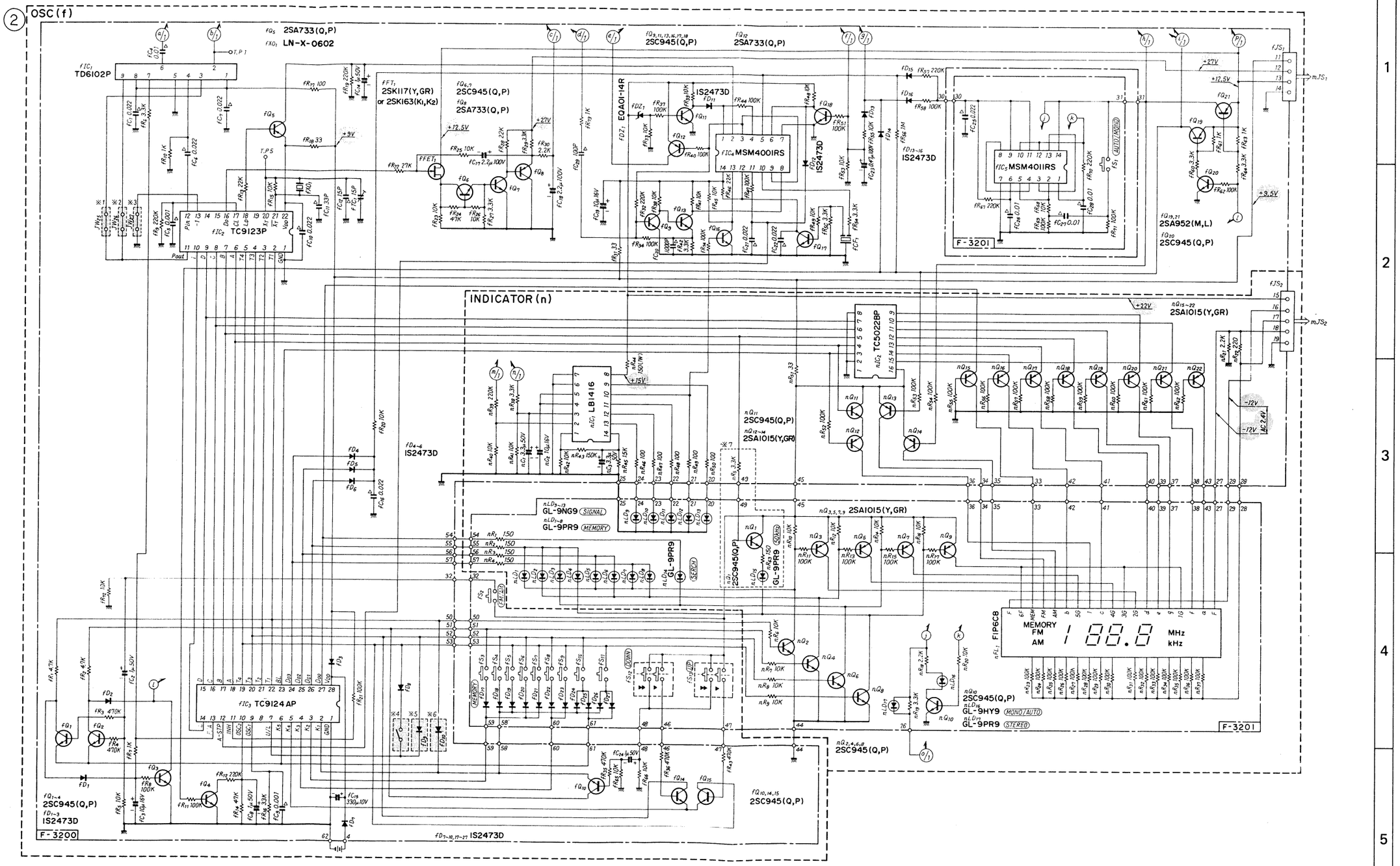

7. NOTES

7-1. Notice when the user moves from 9 kHz to 10 kHz step area, or vice versa, in AM broadcasting frequency.

AM programs are being broadcast under channel plans which, depending on the broadcasting area in the world, are characterized by different channels (frequency intervals) between broadcasting stations. In North, South, and Central America, this channel is 10 kHz whereas in the rest of these areas, it is 9 kHz.
This unit is a synthesizer tuner which varies the reception frequency at each 9 kHz or 10 kHz channel (frequency interval) during auto search reception. If the client uses the unit in an area with a different channel plan, he may not be able to receiver AM stations. The unit he has purchased has been originally adjusted to the channel in his area. It is therefore necessary to change over the channel setting if he moves to an area with a different channel plan.
It is impossible to receive AM broadcasting in Automatic Tuning operation. In this case, use the AM 9 kHz/10 kHz selection switch (fS12) installed on the rear panel, in accordance with Table 7-1.
If no switch fS12 is installed, change the position where the diode fD8 is connected.

7-2. Notice when the user moves from 50 kHz to 100 kHz step area, or vice versa, in FM broadcasting frequency.

In this case, change the positions where the diode (fD10) is connected on the circuit board F-3200, in accordance with Table 7-2.
(In most of countries, frequency-step between two FM stations is every 100 kHz, but in some areas of Europe, it is 50 kHz asides.)

Fig. 7-1

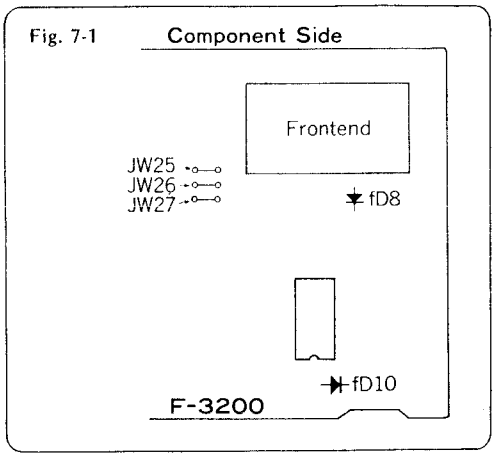

Table 7-1

Parts	10 kHz frequency step	9 kHz frequency step
Switch, fS12	Set 10 kHz	Set 9 kHz
fD8	Connect this diode	Remove this diode

Table 7-2

Parts	100 kHz frequency step	50 kHz frequency step
fD10	Remove this diode	Connect this diode

8. REPLACEMENT OF MAIN PARTS

8-1. Front panel

1) Loosen six set screws for fixing the bonnet before removing the bonnet.
2) Loosen four set screws for fixing the front panel before pulling the front panel forward.

8-2. F-3201 indicator substrate

1) Remove the front panels in accordance with the procedures under 8-1.
2) Remove the plastic name plate fixed by a both-sided adhesive tape.
3) Loosen a set screw at the right end of the substrate F-3201.
4) Move the substrate F-3201 leftwards about 1 cm and fit the convex portion of the chassis to the concave portion of the substrate before pulling the substrate forward.

* To remove the LED plastic cover attached on the substrate, pull the cover forward while nipping the top and bottom of the cover.

9. PACKING LIST

Parts No.	Stock No.	Description
1	07599500	Vinyl Cover
2	07585700	Styrofoam Packing
3	07585800	Carton Case

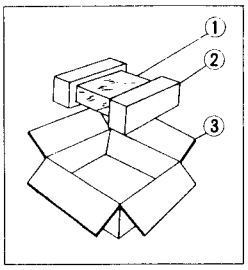

10. ACCESSORY PARTS LIST

Stock No.	Description
07576400	Operating Instructions
38103200	PJP Cord
38201200	FM Antenna
	Battery x2